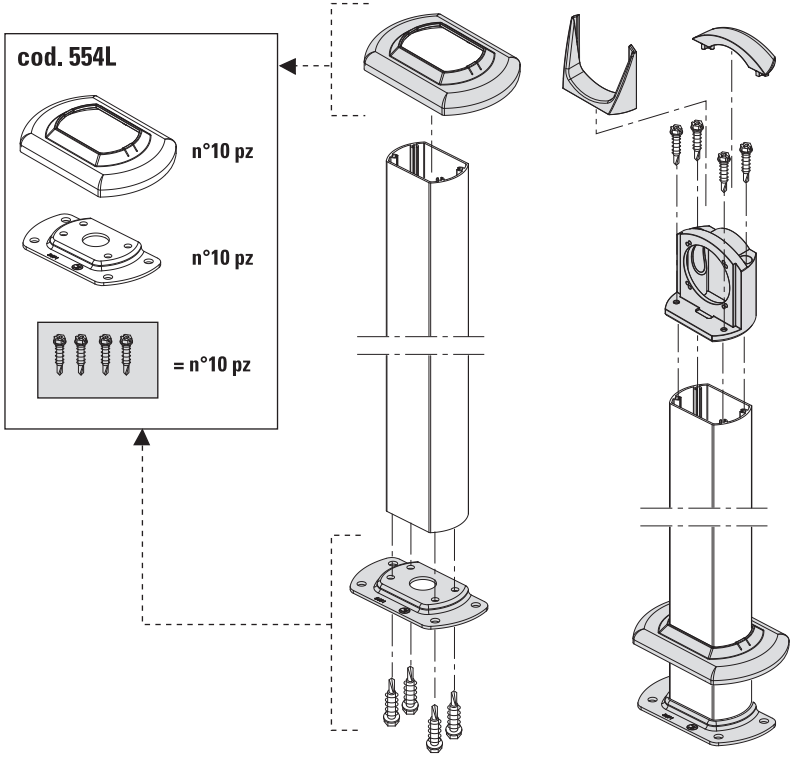

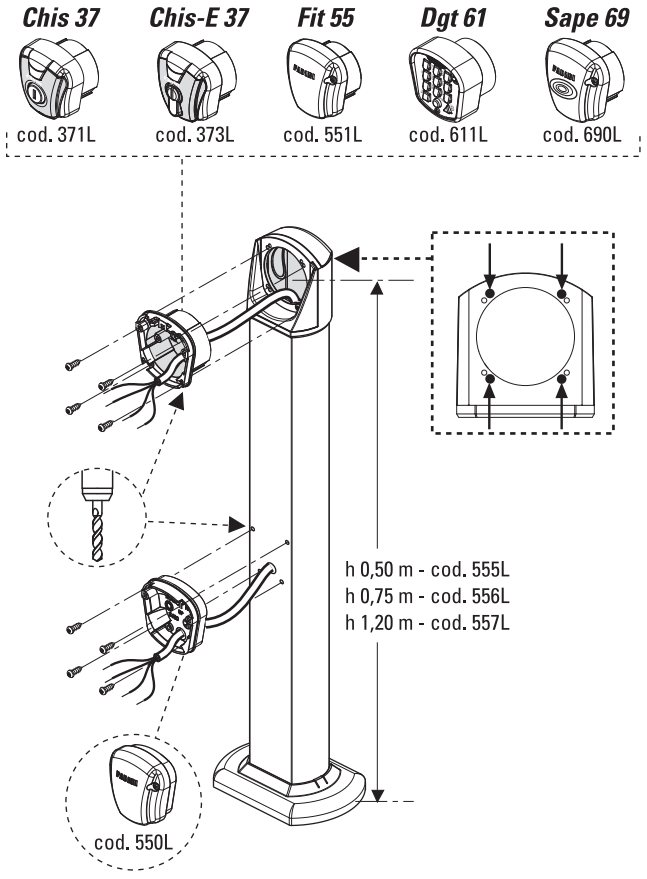

Dis. **5924**

meccanica FADINI
Via Mantova 177/A - 37053 Cerea (VR) Italy
Tel. +39 0442 330422 - Fax +39 0442 331054
e-mail: info@fadini.net - www.fadini.net

CE
made in italy

Fit 55
cod. 551L



Chis 37
cod. 371L

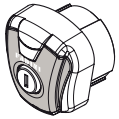

Chis-E 37
cod. 373L

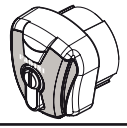

07 - 2014

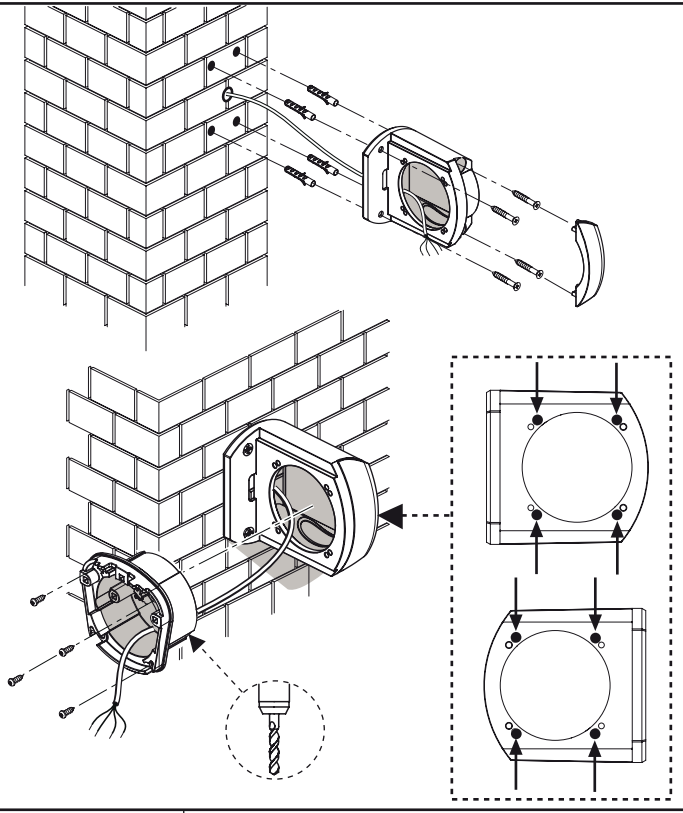

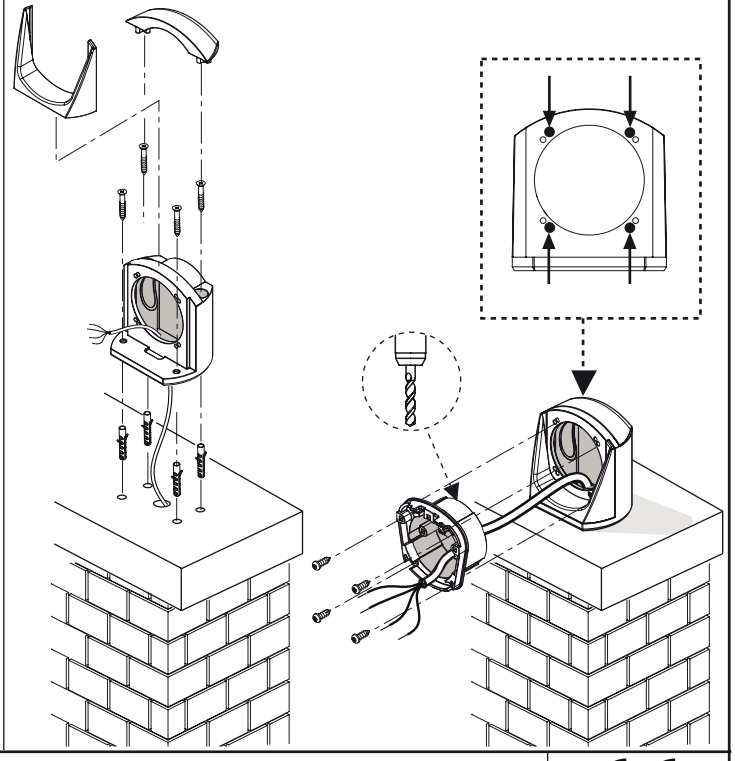

Dis. 6014

meccanica FADINI
Via Mantova 177/A - 37053 Cerea (VR) Italy
Tel. +39 0442 330422 - Fax +39 0442 331054
e-mail: info@fadini.net - www.fadini.net

CE
made in italy